"The Sizing People" ®

Separator Frames

Midwestern services all your screening needs by manufacturing premium frames to fit most makes and models of round vibratory separators. These frames are designed to keep production levels high and downtime at a minimum. All Midwestern frames are constructed to meet the demanding needs of the processing industry. Midwestern manufactures our standard frames from a thicker gauge of steel while maintaining competitive pricing. This gives you the best value — and a product that will last.

Thicker Gauge

Lower / Table Frame

Middle / Distributing Frame

Upper / Spacing Frame

Kleener Tray System

Utilizing plastic sliders in the Kleer tray system will help reduce and eliminate blinding issues. This system is ideal for wet applications.

RAS System

Available in a low-profile, single or double-deck design, the RAS system allows for the fines to fall through the screen while the oversized material gently cascades over the screen's edge and into an inclined path to the discharge chute.

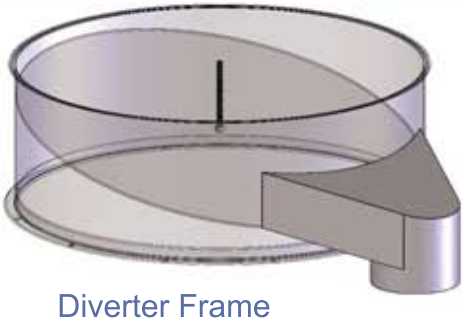

Diverter Frame

The diverter frame is useful when dealing with a high volume of undersize. After the material passes through the screen mesh, it is angled directly to the downspout for quick discharge.

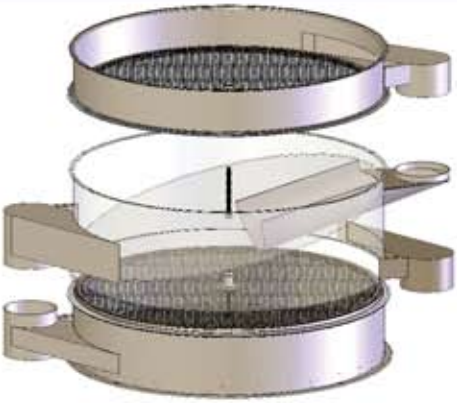

Series Feed Frame

Specifically manufactured for high capacity screening, the series feed frame gives the user the ability to screen the material twice with one machine.

Ball Tray System

The ball tray assembly will reduce blinding caused by damp material and near-size plugging of the sizing screen mesh.

Riser (base)

Available either at the time of purchase or to be retrofitted at a later time, the Riser can be constructed to meet your industry's requirements.

MIDWESTERN'S WIRE MESH COMPARISON CHART

					Tensil Bolting Cloth				Mill Grade				Market Grade			
Approx. Microns	MM	US Sieve	OPG.	Tyler Eqiv.	Mesh	OPG.	Wire	% OA	Mesh	OPG.	Wire	% OA	Mesh	OPG.	Wire	% OA
25000	25.0	1"	1.00													
19000	19.0	3/4"	.750													
16000	16.0	5/8"	.625													
14288	14.3	9/16"	.562													
12500	12.5	1/2"	.500													
11200	11.2	7/16"	.438						2	.446	.054	79.6	2	.437	.063	76.4
9500	9.5	3/8"	.375													
8000	8.0	5/16"	.312													
6300	6.3	1/4"	.250						3	.292	.041	76.7	3	.279	.054	70.1
5600	5.6	3.5	.223	3.5					4	.215	.035	74.0	4	.2023	.0475	65.9
4750	4.75	4	.187	4									4	.187	.063	56.0
4000	4.0	5	.157	5					5	.168	.032	70.6	5	.159	.041	63.2
3350	3.35	6	.132	6					6	.139	.028	69.6	6	.132	.0348	62.7
2800	2.80	7	.110	7					7	.115	.028	64.8	7	.108	.035	57.2
2360	2.36	8	.0937	8					8	.100	.025	64.0	8	.0964	.0286	60.2
2000	2.0	10	.0787	9					9	.088	.023	62.7	10	.0742	.0258	56.3
1854	1.85								10	.080	.020	64.0	11	.073	.018	64.5
1700	1.7	12	.0661	10	14	.062	.009	76.4	12	.065	.018	60.8	12	.0603	.023	51.8
1400	1.4	14	.0555	12	16	.0535	.009	73.3	14	.054	.017	57.2	14	.051	.0204	51.0
1180	1.18	16	.0469	14	18	.0466	.009	70.2	16	.0465	.016	55.4	16	.0445	.0181	50.7
1041	1.04				20	.0410	.009	67.2								
1000	1.0	18	.0394	16	22	.0380	.0075	69.7	18	.0406	.015	53.4	18	.0386	.0173	48.3
850	.85	20	.0331	20	24	.0342	.0075	69.2	20	.0360	.014	51.8	20	.034	.0162	46.2
787	.787				26	.0310	.0075	64.8	22	.0320	.0135	49.6				
710	.71	25	.0278	24	28	.0282	.0075	62.4	24	.0287	.013	47.4	24	.0277	.014	44.2
681	.681				30	.0268	.0065	64.8	26	.0275	.011	51.1				
630	.63				32	.0248	.0065	62.7	28	.0257	.010	51.8				
600	.60	30	.0234	28	34	.0229	.0065	60.7	30	.0238	.0095	51.0				
541	.541				36	.0213	.0065	58.7	32	.0223	.009	50.9				
500	.50	35	.0197	32	38	.0198	.0065	56.7	34	.0204	.009	48.1	30	.0203	.0128	37.1
470	.47				40	.0185	.0065	54.8	36	.0188	.009	45.8				
465	.465				42	.0183	.0055	59.1	38	.0178	.0085	45.8				
437	.437				44	.0172	.0055	57.4					35	.0176	.0118	37.9
425	.425	40	.0165	35	46	.0162	.0055	55.8	40	.0165	.0085	43.6				
389	.389				48	.0153	.0055	54.2					40	.0150	.0104	36.0
368	.368				50	.0145	.0055	52.6								
355	.355	45	.0139	42	52	.0137	.0055	51.0	45	.0142	.008	40.8				
330	.33				54	.0130	.0055	49.4								
323	.323				58	.0127	.0045	54.6								
310	.31				60	.0122	.0045	53.3	50	.0125	.0075	39.1				
300	.30	50	.0117	48	62	.0116	.0045	51.7	55	.0112	.007	37.9				
282	.282				64	.0111	.0045	50.7					50	.0110	.0090	30.3
270	.27				70	.0106	.0037	54.9								
260	.26				72	.0102	.0037	53.8								
250	.25	60	.0098	60	74	.0098	.0037	52.7	60	.0102	.0065	37.5				
241	.241				76	.0095	.0037	51.7								
231	.231				78	.0091	.0037	50.6					60	.0092	.0075	30.5
224	.224				80	.0088	.0037	49.6								
212	.212	70	.0083	65	84	.0084	.0035	49.8								
200	.20				88	.0079	.0035	47.9								
193	.193				90	.0076	.0035	47.8								
180	.18	80	.0070	80	94	.0071	.0035	45.0					80	.0070	.0055	31.4
165	.165				105	.0065	.0030	46.9								
150	.15	100	.0059	100	120	.0058	.0025	47.3					100	.0055	.0045	30.3
125	.125	120	.0049	115	145	.0047	.0022	46.4					120	.0046	.0037	30.5
106	.106	140	.0041	150	165	.0042	.0019	47.1					150	.0041	.0026	37.9
90	.090	170	.0035	170	200	.0034	.0016	46.2					180	.0033	.0023	34.7
75	.075	200	.0029	200	230	.0029	.0014	46.0					200	.0029	.0021	33.6
63	.063	230	.0025	250									250	.0024	.0016	36.0
53	.053	270	.0021	270	300	.0021	.0012	40.5					270	.0021	.0016	32.2
45	.045	325	.0017	325									325	.0017	.0014	30.5
38	.038	400	.0015	400									400	.0015	.0010	36.0
25	.025	500	.0010										500	.0010	.0010	25.0
20	.020	635	.0008										635	.0008	.0008	25.0

TOLL FREE 877-4-SIZING (877-474-9464)

MIDWESTERNIND.COM

MASSILLON, OHIO MACON, GEORGIA

MIDWESTERN INDUSTRIES, INC.

American Owned, American Made